# SG 4900

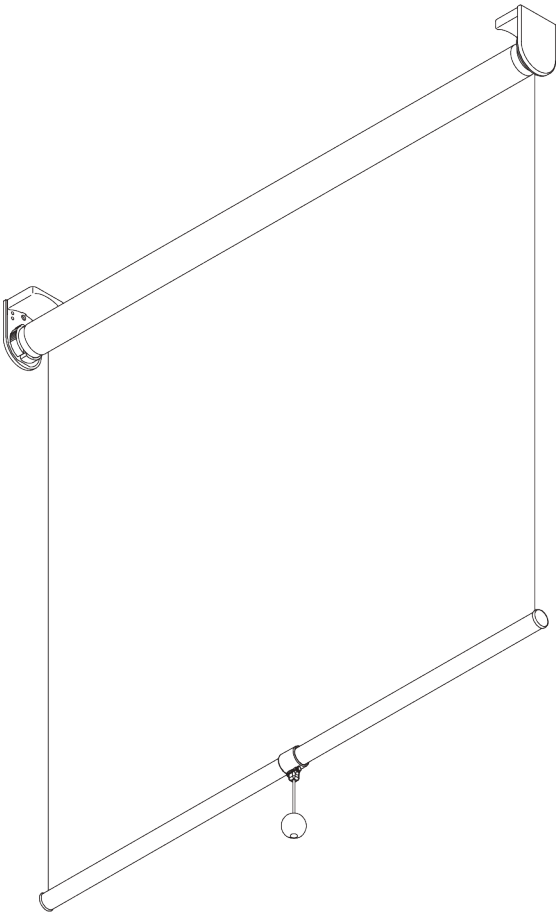

## PRODUCT INFORMATION

- ***Operation:*** *spring*
- ***Range:*** *S - M*
- ***Fitting:*** *ceiling, wall, recess*
- ***Colours:*** *white RAL 9016; special colours or anodised aluminum possible*
- ***Fabrics:*** *refer to Silent Gliss fabric collection*

***Features:***

- *Speed controller for controlled ascent*
- *Stop clutch mechanism to stop at any position*
- *Click-in brackets*
- *Installation profile*
- *End stop controller*

***07/2024/V1***

SilentGliss

# SYSTEM SPECIFICATIONS

## A. SYSTEM DIMENSIONS

*2 m*

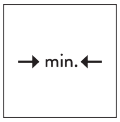


*30 cm*

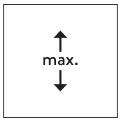


*3 m*

*6 m²*

*2.2 kg*

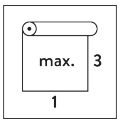


*Recommended width / height ratio max. 1:3*

## B. PROFILE

**Profile information**

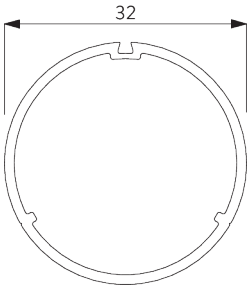


***SG 4227***
*Tube ø 32 mm*

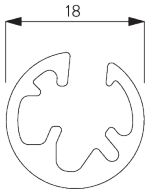


***SG 10872***
*Bottom bar*

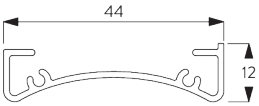


***SG 10534***
*Installation profile*

## C. HOW TO MEASURE

*incl. bracket covers*

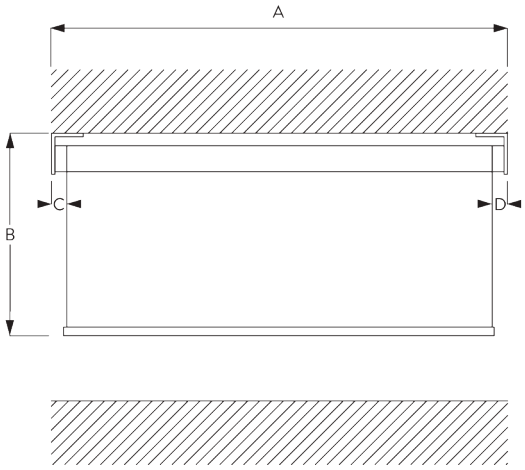


*A: System width*
*B: System height*
*C: Light gap left side: 15 mm*
*D: Light gap right side: 15 mm*

*Note:*
*All measurements include 2 mm for bracket cover per side!*
*These can be omitted to reduce side light gaps.*

## D. SPECIFICATION TEXT

***Silent Gliss SG 4900 Spring Operated Roller Blind System.*** *Roller blind system for small to medium size blind applications up to 2.0m wide. Supplied made to measure and complete comprising anodised aluminium barrel SG 4227. Ceiling fix with brackets SG 10987 /SG 10989 / wall fix with brackets SG 10987 / SG 10990 / recess fix with brackets SG 10989 / SG 10991. Optional installation profile SG 10534. Available with optional stop controller SG 4377 to enable exact upper stop position of the blind (supplied as standard with fabric covered bottom bar). Assembled with powder coated white finish aluminium bottom weight bar SG 4221. Spring to be specified according to weight and characteristics of fabric. Fabric to be chosen from the Silent Gliss fabric range, Price Group 1R / 2R / 3R/4R.*

# FITTING

## A. FITTING INFORMATION

***For detailed fitting information, visit the Silent Gliss website.***

### Fixing points

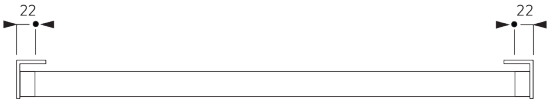


*Brackets (wall / ceiling)*

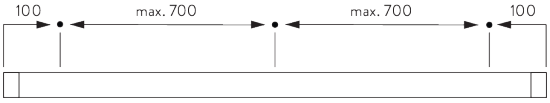


*Installation profile SG 10534 (wall / ceiling)*

## B. CEILING FITTING

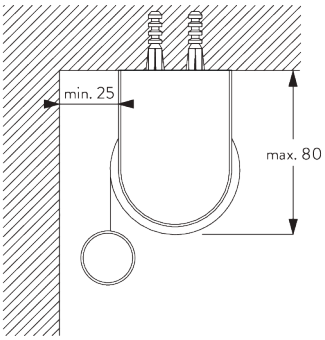


***Brackets***

*Bracket SG 10989: window rolling side of fabric or*
*Bracket SG 10991: room rolling side of fabric*

*Bracket SG 10987*

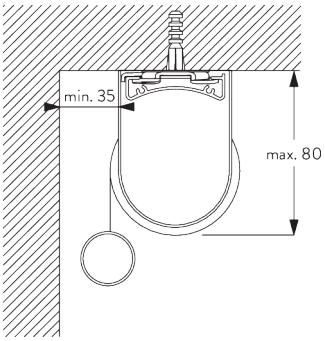


***Installation profile SG 10534 and clamp SG 3044***

*Bracket SG 10989: window rolling side of fabric or*
*Bracket SG 10991: room rolling side of fabric*

*Bracket SG 10987*

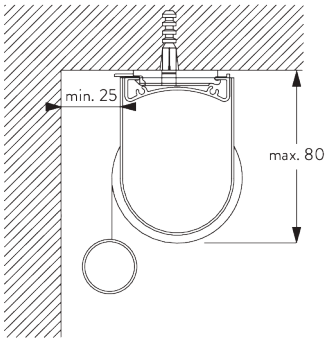


***Installation profile SG 10534 and click bracket SG 10539***

*Bracket SG 10989: window rolling side of fabric or*
*Bracket SG 10991: room rolling side of fabric*

*Bracket SG 10987*

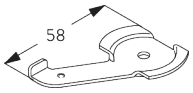


***SG 3044***
*Clamp*

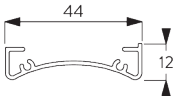


***SG 10534***
*Installation profile*

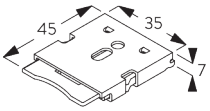


***SG 10539***
*Bracket*

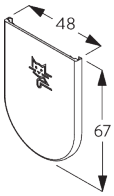


***SG 10574***
*Bracket cover*

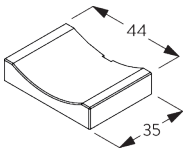


***SG 10575***
*Bracket cover*

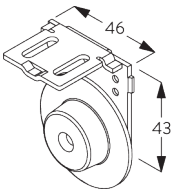


***SG 10987***
*Bracket*

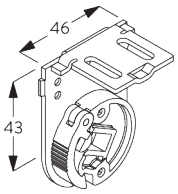


***SG 10989***
*Bracket*

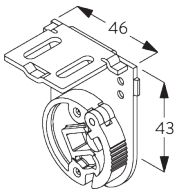


***SG 10991***
*Bracket*

## C. WALL FITTING

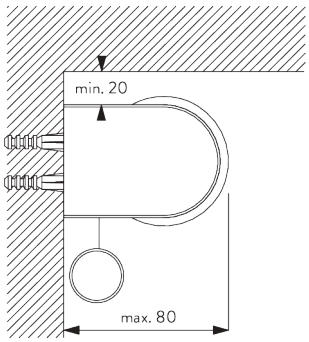


***Brackets***

*Bracket SG 10990: window rolling side of fabric or*
*Bracket SG 10992: room rolling side of fabric*

*Bracket SG 10987*

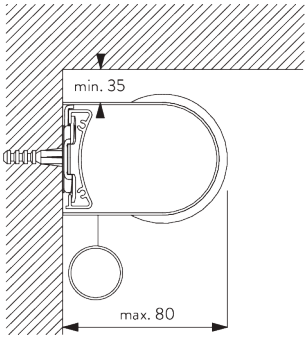


***Installation profile SG 10534 and clamp SG 3044***

*Bracket SG 10990: window rolling side of fabric or*
*Bracket SG 10992: room rolling side of fabric*

*Bracket SG 10987*

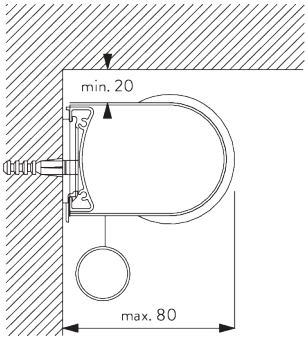


***Installation profile SG 10534 and click bracket SG 10539***

*Bracket SG 10990: window rolling side of fabric or*
*Bracket SG 10992: room rolling side of fabric*

*Bracket SG 10987*

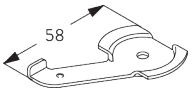


***SG 3044***
*Clamp*

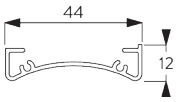


***SG 10534***
*Installation profile*

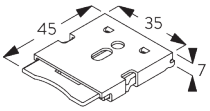


***SG 10539***
*Bracket*

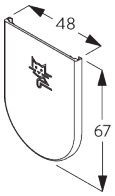


***SG 10574***
*Bracket cover*

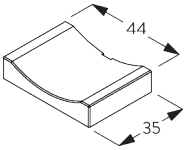


***SG 10575***
*Bracket cover*

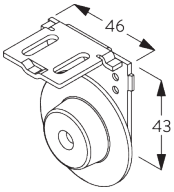


***SG 10987***
*Bracket*

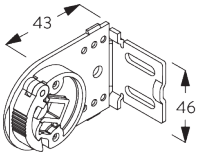


***SG 10990***
*Bracket*

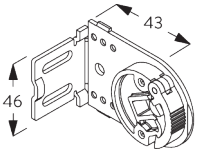


***SG 10992***
*Bracket*

## D. RECESS FITTING

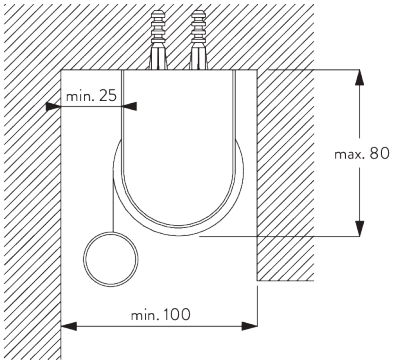


***Brackets***

*Bracket SG 10989: window rolling side of fabric or*
*Bracket SG 10991: room rolling side of fabric*

*Bracket SG 10987*

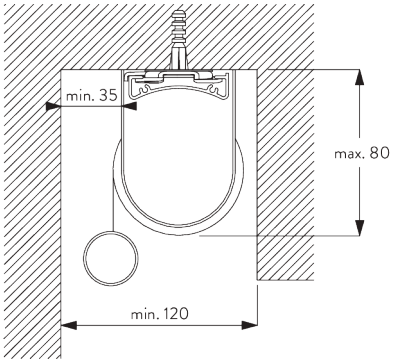


***Installation profile SG 10534 and clamp SG 3044***

*Bracket SG 10989: window rolling side of fabric or*
*Bracket SG 10991: room rolling side of fabric*

*Bracket SG 10987*

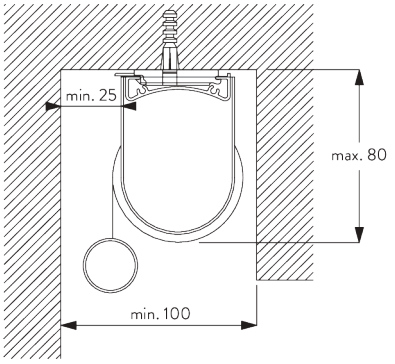


***Installation profile SG 10534 and click bracket SG 10539***

*Bracket SG 10989: window rolling side of fabric or*
*Bracket SG 10991: room rolling side of fabric*

*Bracket SG 10987*

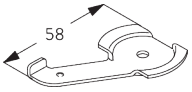


***SG 3044***
*Clamp*

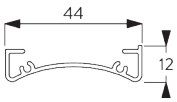


***SG 10534***
*Installation profile*

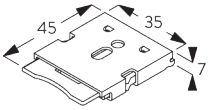


***SG 10539***
*Bracket*

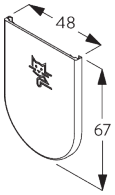


***SG 10574***
*Bracket cover*

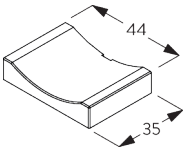


***SG 10575***
*Bracket cover*

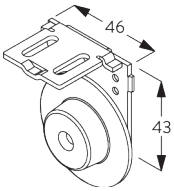


***SG 10987***
*Bracket*

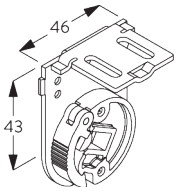


***SG 10989***
*Bracket*

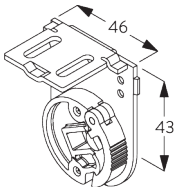


***SG 10991***
*Bracket*

# SYSTEM OPTIONS

## A. FABRIC ROLL-OFF

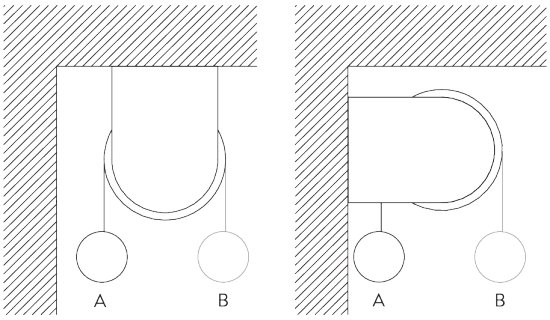


*A: Fabric roll-off window side (standard)*
*B: Fabric roll-off room side (option)*

## B. INSTALLATION PROFILE

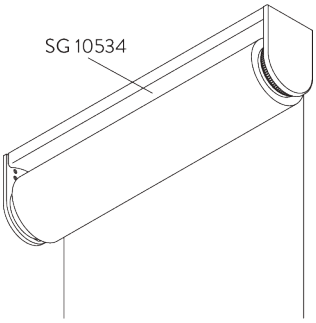

## C. ADJUSTABLE END STOP

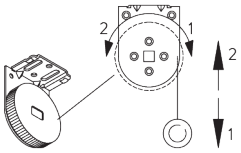


## D. TWO SINGLE SYSTEMS SIDE-BY-SIDE

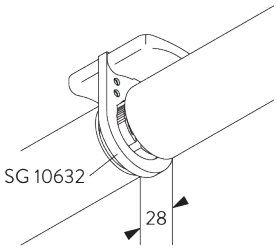


*Additional parts:*

*– 1x SG 10632 Connection bracket cover*

## E. CHILD SAFETY PULL BALL SET

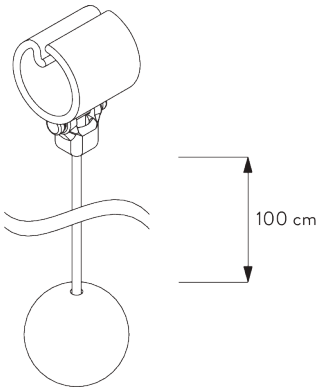


*Child safety pull ball set SG 10765*

# PARTS

## A. STANDARD PARTS

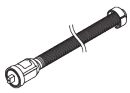

**SG 4214**
*Spring C 552 mm*

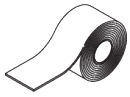

**SG 4226**
*Double tape 30 mm*

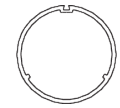

**SG 4227**
*Tube ø 32 mm*

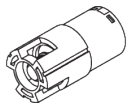

**SG 4228**
*Speed controller right*

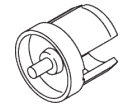

**SG 4231**
*Tube adapter*

**SG 10574**
*Bracket cover*

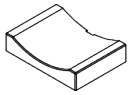

**SG 10575**
*Bracket cover*

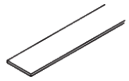

**SG 10668**
*PVC strip 10 mm*

**SG 10765**
*Child safety pull ball*

**SG 10872**
*Bottom bar*

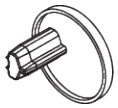

**SG 10874**
*End cover*

**SG 10987**
*Bracket*

**SG 10989**
*Bracket*

## B. OPTIONAL PARTS

**SG 3044**
*Clamp*

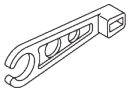

**SG 4211**
*Winder*

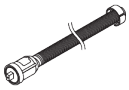

**SG 4212**
*Spring A 365 mm*

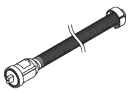

**SG 4213**
*Spring B 442 mm*

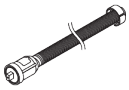

**SG 4215**
*Spring D 612 mm*

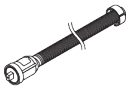

**SG 4216**
*Spring E 502 mm*

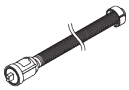

**SG 4217**
*Spring F 612 mm*

**SG 4218**
*Spring Y-2 198 mm*

**SG 4377**
*End stop*

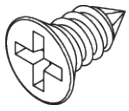

**SG 10139**
*Countersunk screw 2.9x6.5*

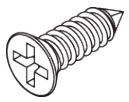

**SG 10498**
*Countersunk screw 2.9x9.5*

**SG 10534**
*Installation profile*

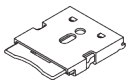

**SG 10539**
*Bracket*

**SG 10632**
*Connection bracket cover*

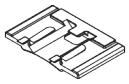

**SG 10690**
*Spacer*

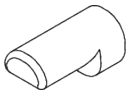

**SG 10707**
*End stop*

**SG 10988**
*Bracket end stop*

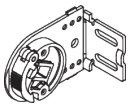

**SG 10990**
*Bracket*

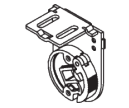

**SG 10991**
*Bracket*

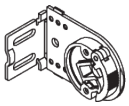

**SG 10992**
*Bracket*